Single Stage Ring Blower

DAEWON VACUUM CO., LTD

DHB-800/900/1010

DHB-1000/1050

DHB-1100/1200/1300

Technical data

60Hz

Models	Pressure	Vacuum	Air Flow	Motor	Current	Noise	Weight	Connections	Bearing	
DHB-	㎜H_2O	㎜H_2O	㎥/min	kW(Pole)	220V/A	dB	kg	G(BSP)	Front	Rear
800	3,000	3,100	10	6.3(2)	28.5 / 14.9	78	148	2½"(65A)	6207z	6307z
900	4,500	3,500	10	8.6(2)	31 / 18	78	155	2½"(65A)	6207z	6307z
1000	5,000	4,000	10	12.6(2)	40 / 23.2	78	182	2½"(65A)	6207z	6308z
1010	2,400	2,200	16	8.6(2)	29.4 / 17	80	170	3"(80A)	6207z	6308z
1050	3,400	3,000	16	12.6(2)	40 / 23.2	80	201	3"(80A)	6307z	6308z
1100	2,100	2,000	20	12.6(2)	40 / 23.2	82	248	4"(100A)	6208z	6308z
1200	3,000	2,900	20	15.3(2)	54 / 31.2	82	257	4"(100A)	6208z	6308z
1300	4,500	3,800	20	22.7(2)	76 / 43.9	82	279	4"(100A)	6208z	6308z

50Hz

Models	Pressure	Vacuum	Air Flow	Motor	Current		Noise	Weight	Connections	Bearing	
DHB-	㎜H_2O	㎜H_2O	㎥/min	kW	220V/A	380V/A	dB	kg	G(BSP)	Front	Rear
800	3,000	2,700	8.4	5.5	22	12.7	74	144	2½"(65A)	6207z	6307z
900	4,000	3,000	8.4	7.5	29	16.8	74	151	2½"(65A)	6207z	6307z
1000	4,400	3,500	8.4	11	40	23.2	74	166	2½"(65A)	6207z	6308z
1010	2,400	2,200	13	7.5	29	16.8	77	168	3"(80A)	6207z	6308z
1050	3,400	3,000	13	11	40	23.2	77	183	3"(80A)	6207z	6308z
1100	2,100	2,000	17	11	40	23.2	78	234	4"(100A)	6208z	6308z
1200	3,000	2,800	17	15	54	31.3	78	248	4"(100A)	6208z	6308z
1300	4,300	3,600	17	18.5	65	37.6	78	260	4“(100A)	6208z	6308z

Single Stage Ring Blower

DHB-800~1050

Performance Curve

50Hz

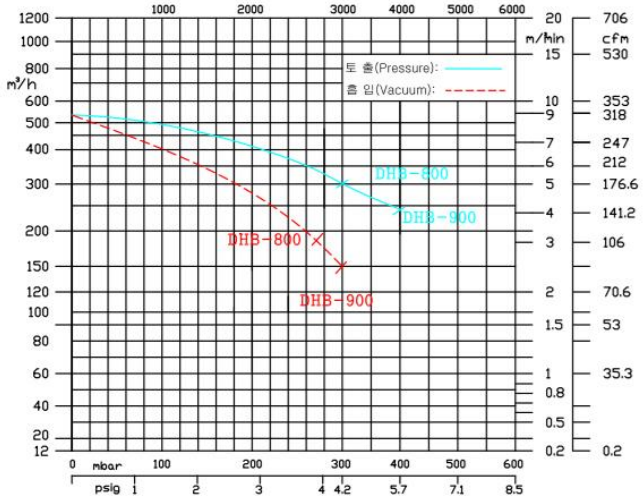

60Hz

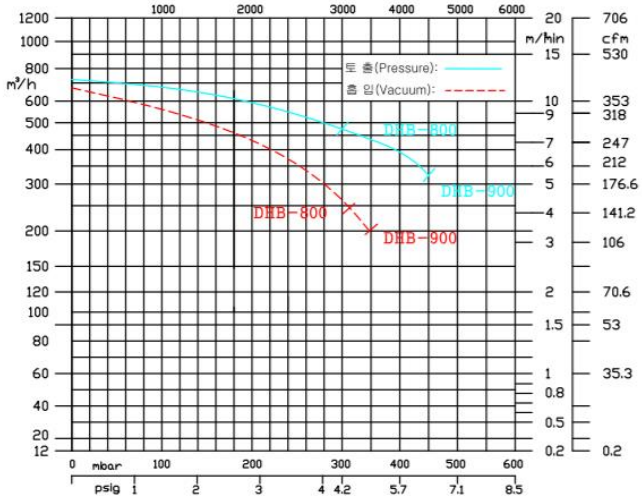

50Hz

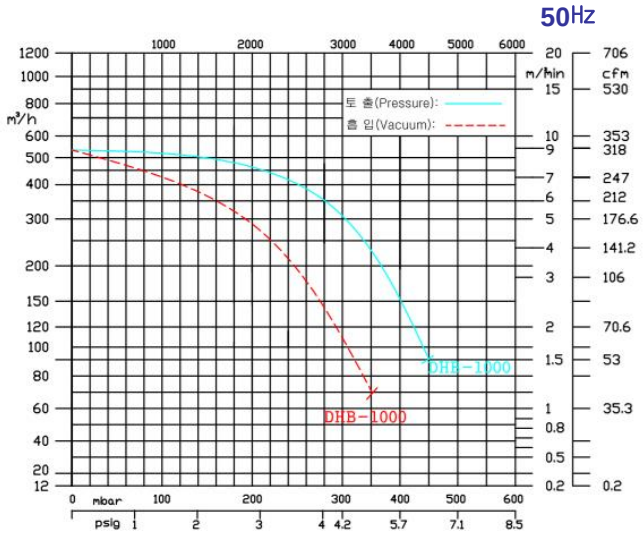

60Hz

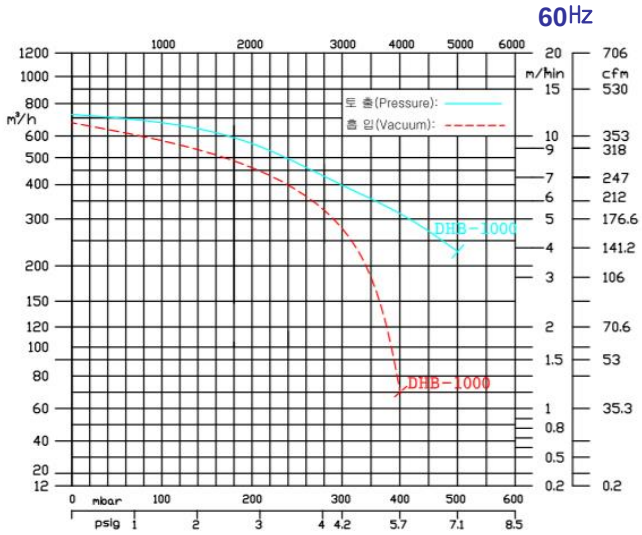

50Hz

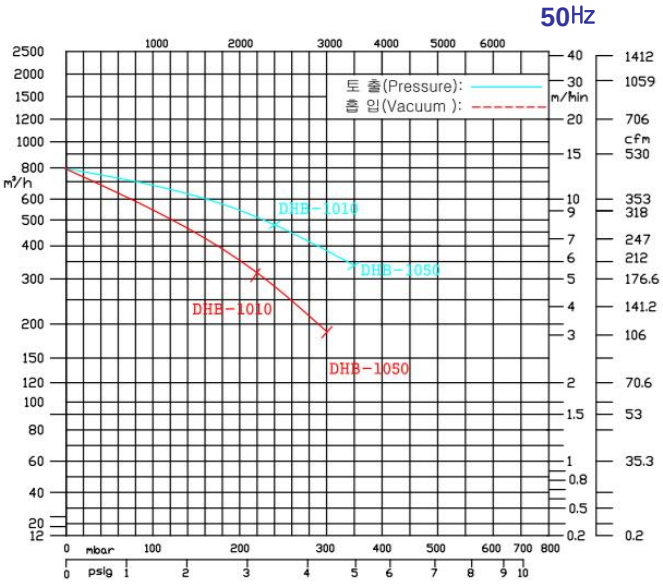

60Hz

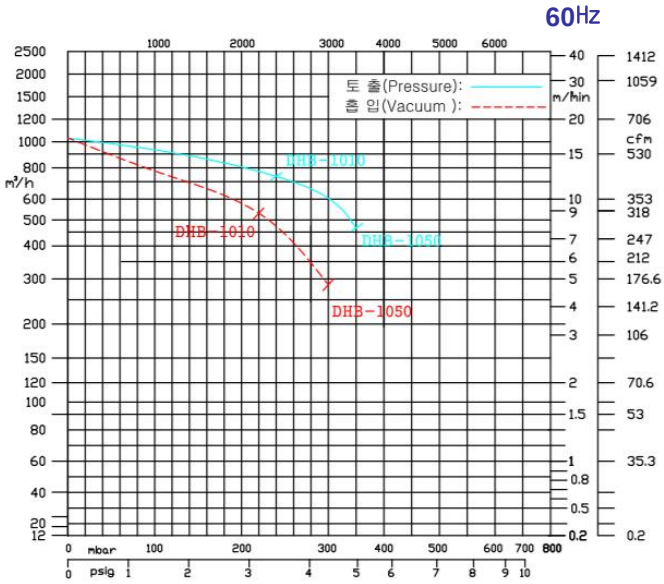

Dimensions

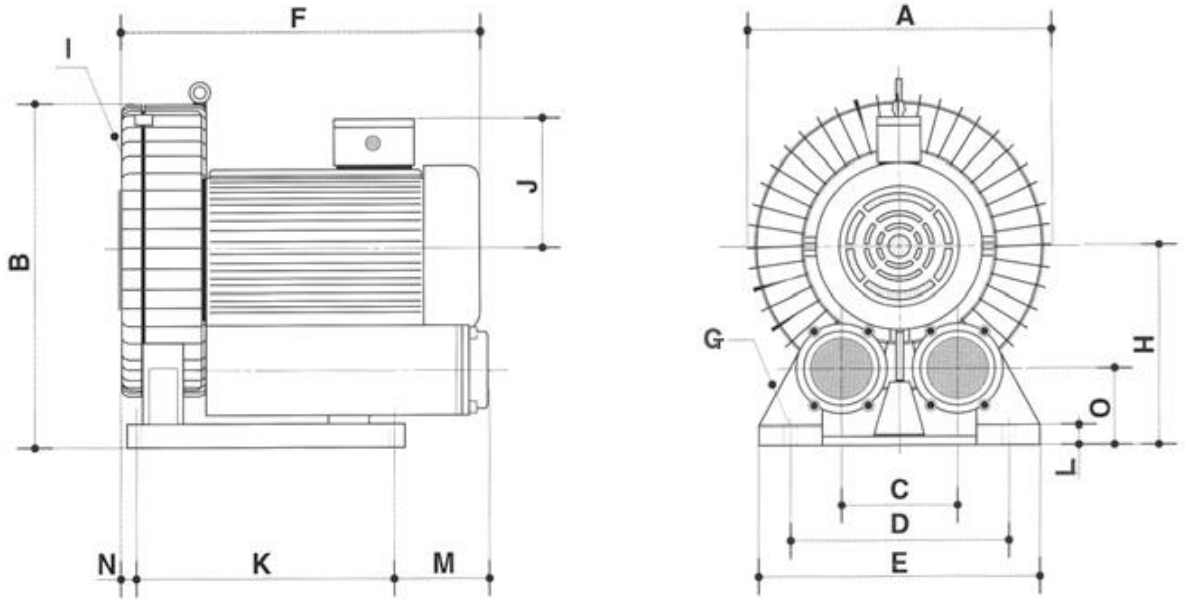

Models	A	B	C	D	E	F	G	H	I	J	K	L	M	N	O
DHB-800	505	540	150	365	425	527	4-Ø15	290	3-M12	172	290	32	200	25	105
DHB-900	505	540	150	365	425	557	4-Ø15	290	3-M12	172	290	32	200	25	105
DHB-1010	525	571.5	190	415	472	559	4-Ø15	310	3-M12	172	290	28	196	48	120

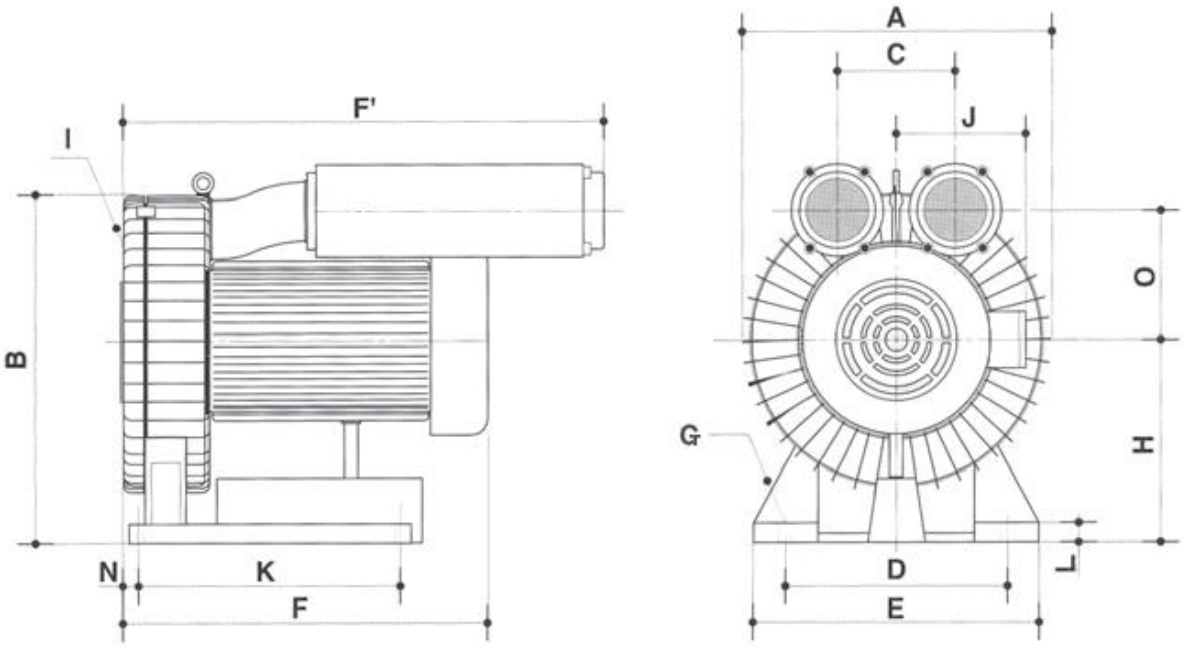

Models	A	B	C	D	E	F	F´	G	H	I	J	K	L	N	O
DHB-1000	505	540	190	365	425	534	640	4-Ø15	290	3-M12	258	290	32	25	235
DHB-1050	505	572	250	415	472	538	674	4-Ø15	310	3-M12	258	290	28	48	230

Single Stage Ring Blower

DHB-1100/1200/1300

Performance Curve

50Hz

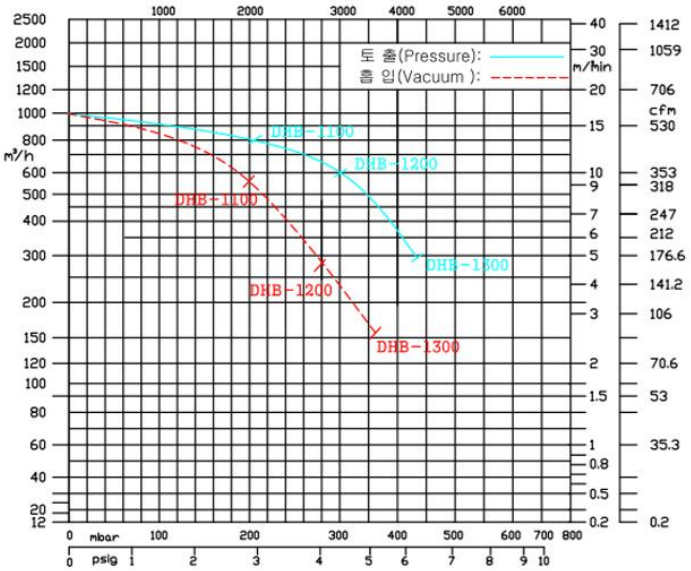

60Hz

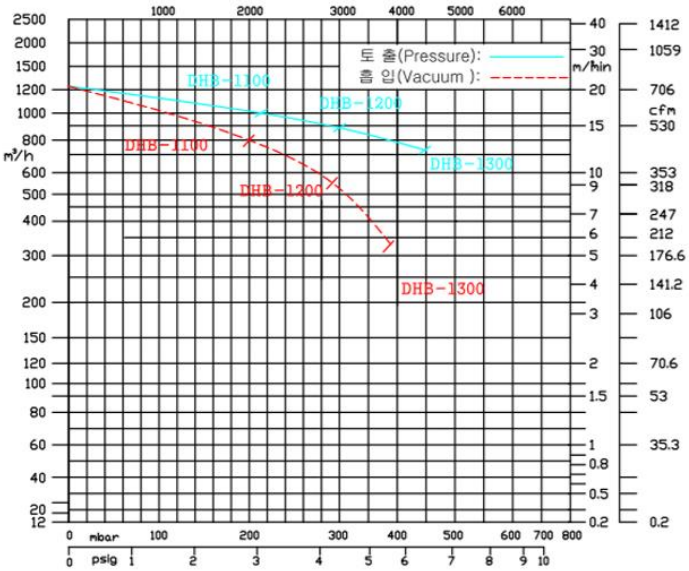

Dimensions

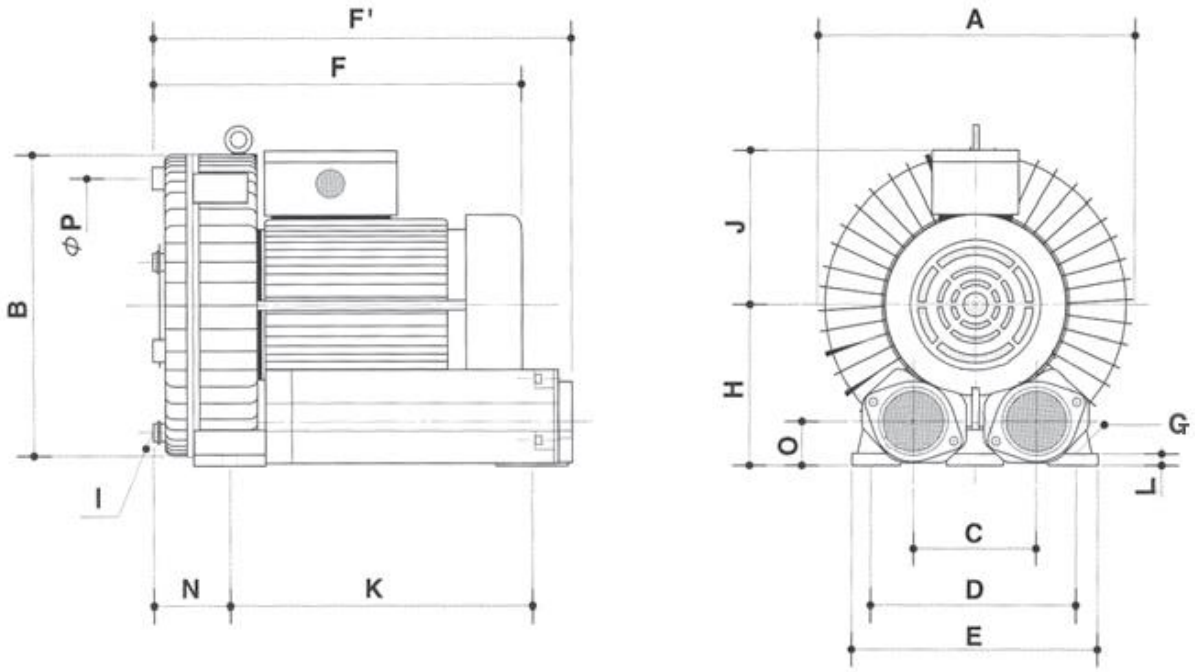

Models	A	B	C	D	E	F	F´	G	H	I	J	K	L	N	O	P
DHB-1100	540	570	212	363	415	583	702	3-Ø15	300	3-M12	258	610	32	100	91	490
DHB-1200	540	570	212	363	415	608	702	3-Ø15	300	3-M12	258	610	32	100	91	490
DHB-1300	540	570	212	363	415	638	702	3-Ø15	300	3-M12	258	610	32	100	91	490